RXA-B

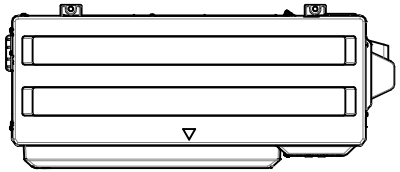

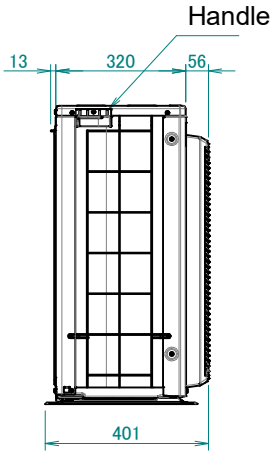

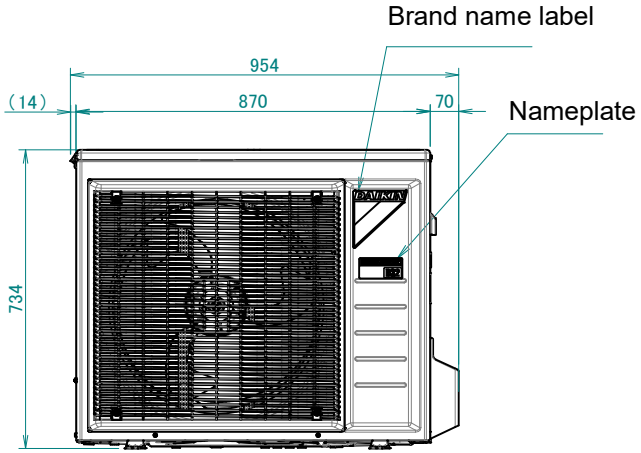

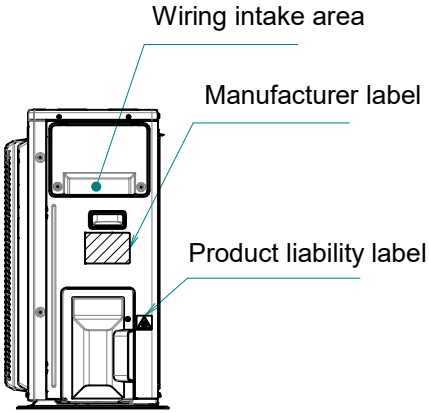

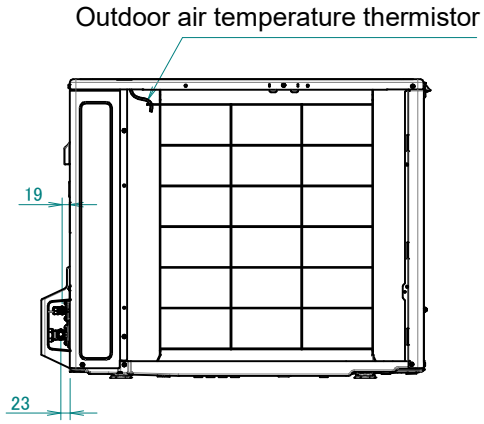

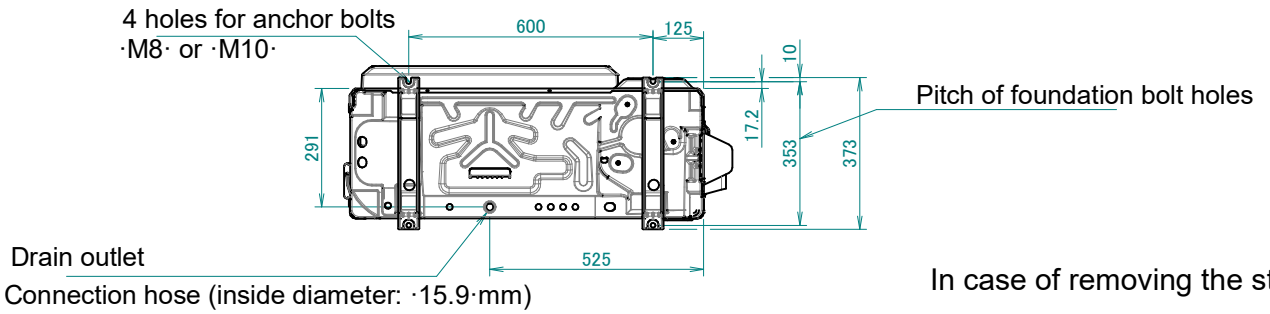

In case of removing the stop valve cover.

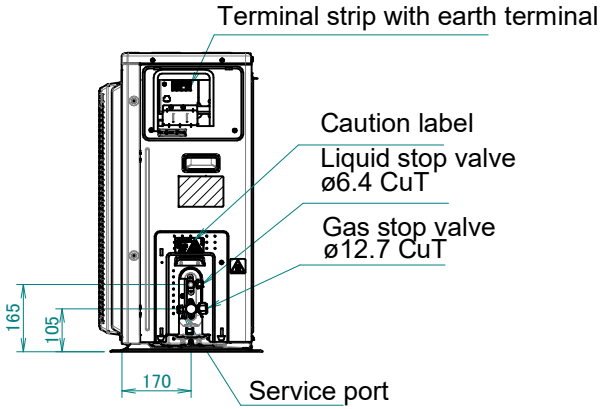

Minimum space for air passage

Wall height on air outlet side < 1200 mm

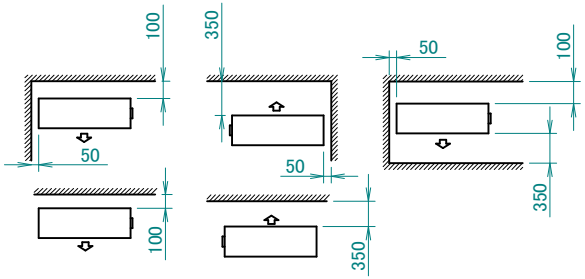

3D114108B